Aim : Study of Zener diode as a voltage regulator and use of IC 7805 voltage stabilizer..

Electronic Parts Required :

(i) Power supply : ± 15 V
(ii) $R_S = R_C = 2.2\ K\Omega = 2$ Nos
(iii) Load resistance = $R_L = 1.0\ k\Omega$ Potentio-meter, 1.0 W
(iv) Zener diode = 1 No with $V_Z = 2.7$ or 3.9 or 5.1 V
(v) LM7805 IC = 1 No
(vi) Breadboard = 1 No
(vii) Two DT-830D multi-meters for current measurements. One 8007 multimeter with probe for Voltage measurements.
(viii) single stand wires = 6 Nos

Part A : Zener Diode as Voltage Regulators:

Circuit Diagram :

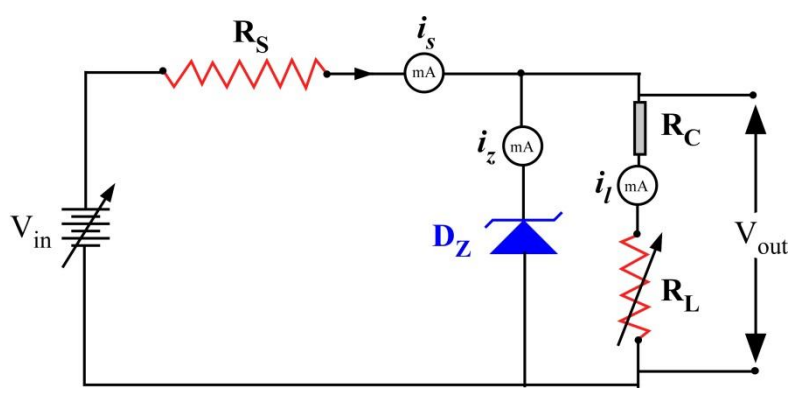

A Zener diode of break down voltage V_z is reverse connected to an input voltage source V_i across a load resistance R_L and a series resistor R_S. The voltage across the Zener will remain steady at its break down voltage V_Z for all the values of Zener current $\boldsymbol{i}_Z$ as long as the current remains in the breakdown region. In the above circuit, the Zener diode maintains a constant output voltage $V_0 = V_Z$ independent of variations in load resistance R_L or the variation of input voltage V_i (> V_Z) so long as the diode remains in the breakdown region and the input voltage remains within a minimum and maximum voltage.

From the circuit diagram we can write $\mathbf{i}_S = \mathbf{i}_Z + \mathbf{i}_L$

Where, $i_S = \frac{Vi - Vz}{Rs}$, and $i_L = \frac{Vo}{Rl}$

Basically there are two types of regulations such as:

(i) Line Regulation :

In line regulation, series resistance, R_S and load resistance, R_L are fixed, only input voltage, V_{in} is varied. Output voltage, V_0 remains the same at V_Z and $\boldsymbol{i}_L$ remains constant as long as the input voltage is maintained above a minimum value.

$$\delta\, \boldsymbol{i}_Z = \delta\, \boldsymbol{i}_S$$

Thus when load R_L is fixed and input voltage V_i varies then Zener current $\boldsymbol{i}_Z$ and total current $\boldsymbol{i}_S$ change in such to maintain $\boldsymbol{i}_L$ and hence V_0 constant. Any change in V_i appears across the series limiting resistance R_S.

Table – I [*Maximum Input voltage should be 20 V*]

Sl. No	$\mathbf{R}_L$ (Ohm)	$\mathbf{V}_i$ (Volts)	$\boldsymbol{i}_S$ (mA)	$\boldsymbol{i}_Z$ (mA)	V_0 (Volts)
1.	1K or 2.2K	0 V			
2.	**CONSTANT**	-			
	"	-			
20.	"	20 V			

You can take more than 20 readings if you like to have smooth curve.

Graph –I

(*i*) Plot graph between i_Z and i_S to show that $\delta \boldsymbol{i}_Z = \delta \boldsymbol{i}_S$ (Directly proportional)

(*ii*) Plot graph between V_{in} and V_{out} . Find out the breakdown voltage (V_Z) of Zener diode.

(ii) Load Regulation :

In load regulation, input voltage, $\mathbf{V}_i$ remains constant and the load resistance, $\mathbf{R}_L$ is varied. Output voltage remains same, as long as the load resistance is maintained above a minimum value. Since the voltage $\mathbf{V}_Z$ across the Zener remains constant, $\boldsymbol{i}_S$ is *independent of load*. Hence in this case

$$\delta\, \boldsymbol{i}_Z = -\,\delta\, \boldsymbol{i}_L$$

Thus Zener current changes with change in load current due to change in $\mathbf{R}_L$ but output remains constant at $\mathbf{V}_Z$.

Table – II (without R_C) : R_C = A current limiting constant resistor **[*Maximum Input voltage should be 15 V*]**

Sl. No	V_i (Volts)	R_L (Ohm)	i_L (mA)	i_Z (mA)	V_0 (Volts)
1.	15 V	0 Ω			
2.	**CONSTANT**	-			
	"	-			
20.	"	1K Ω			

You can take more than 20 readings if you like to have smooth curve.

Graph –II

(*i*) Plot graph between I_Z and I_L to show that $\delta \mathbf{I}_Z = -\delta \mathbf{I}_L$ (Inversely proportional)

(ii) Plot graph between V_{out} and R_L . Find out the breakdown voltage ($V_{out} = V_Z$) of Zener diode.

Table – III (with R_C = 2.2 K Ω) : R_C = A current limiting constant resistor

Sl. No	V_i (Volts)	R_L (Ohm)	i_L (mA)	i_Z (mA)	V_0 (Volts)
1.	"				
2.	**CONSTANT**				
	"				
20.	"				

Graph –III

(*i*) Plot graph between I_Z and I_L to show that $\delta \mathbf{I}_Z = -\delta \mathbf{I}_L$ (Inversely proportional)

(ii) Plot graph between V_{out} and R_L in the presence of R_C. Find out the breakdown voltage ($V_{out} = V_Z$) of Zener diode which was not possible in Table II because Load R_L draw more current.

Part B : **Voltage Regulator IC 7805:**

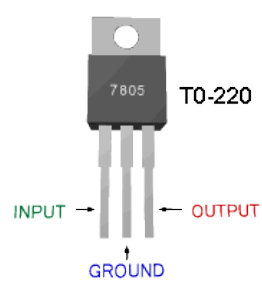

For LM7805 the minimum input voltage is 7.2 V and maximum input voltage is 35 V to get a stable 5.0 V output voltage. The maximum current the load can draw is about 1 Amp.

Circuit Diagram :

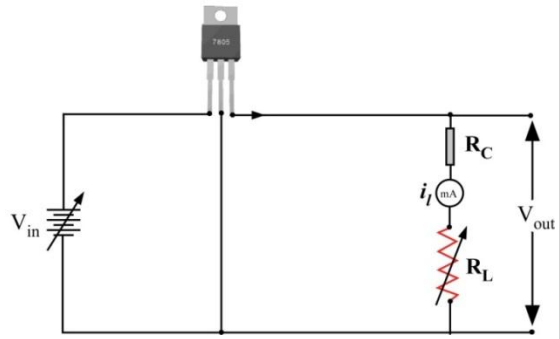

(i) Line Regulation :

In line regulation, output constant current limiting series resistance, R_C and load resistance, R_L are fixed, only input voltage, V_{in} is varied. Output voltage, V_0 remains the same at V_Z and $\boldsymbol{i}_L$ remains constant as long as the input voltage is maintained above a minimum value.

Table – I [*Maximum Input voltage should be 20 V* **]**

Sl. No	$\mathbf{R_C + R_L}$ (Ohm)	$\mathbf{V_i}$ (Volts)	$\boldsymbol{i_l}$ (mA)	V_0 (Volts)
1.	2.2 K	0		
2.	**CONSTANT**	-		
	"	-		
20.	"	20		

You can take more than 20 readings if you like to have smooth curve.

Graph –I

(*i*) Plot graph between V_{in} and V_{out}. Find V_{min} input voltage for which V_{out} is constant to 5 V.

(ii) Load Regulation :

In load regulation, input voltage, $\mathbf{V_i}$ remains constant and the load resistance, $\mathbf{R_L}$ is varied. Output voltage remains same irrespective of load.

Table – II [*Maximum Input voltage should be 15 V, R_C = 2.2 KΩ* **]**

Sl. No	$\mathbf{V_i}$ (Volts)	$\mathbf{R_L}$ (Ohm)	$\boldsymbol{i_l}$ (mA)	V_0 (Volts)
1.	15 V	0 Ω		
2.	**CONSTANT**	-		
	"	-		
20.	"	1K Ω		

You can take more than 20 readings if you like to have smooth curve.

Graph –II

(*i*) Plot graph between V_{out} and R_L.

***